[redacted]

Work Order ID 57243

Wednesday, March 31, 2010 8:26:30 AM

Item ID: D350-602-011 **Accept** **Setup Start**

Revision ID: **Stop**

Item Name: Heli-Utility-Pod (LH/RH)

Start Date: 3/31/2010 **Start Qty:** 1.00 **Cust Item ID:**

Required Date: 4/5/2010 **Req'd Qty:** 1.00 **Customer:**

Reference: RA110016 / NCR10-025

Run Start

Approvals: **Process Plan:** MF **Date:** 10-3-31 **Tooling:** _____ **Date:** _____

Stop

QC: _____ **Date:** _____ **SPC (Y/N):** _____ **Date:** _____

Sequence ID/ Work Center ID	Operation Description	Set Up/ Run Hours	Draw Number	Draw Rev.	Plan Code	Accept Qty	Reject Qty	Reject Number	Insp. Stamp
Draw Nbr: N/A	Revision Nbr: Rev N/A								
150 Packaging		0.00							
Packaging	**Memo** PULL FROM STOCK D350-602-011 B 52426	0.00							
160 Small Fab		0.00							
Small Fab	**Memo** -REMOVE HARDWARE -FILL HOLES WITH 934 HYSOL AND 10% MILLED FIBRE Hysol M 113 022 milled fibre M 100859	0.00							
170 QC	QC3- Inspect Part Finish	0.00							
Quality Control	**Memo**	0.00							

DART
Dart Aerospace Ltd.
1270 ABERDEEN ST.
HAWKESBURY, ON. CANADA K6A 1K7
TC APPROVAL # 09-89
TEL: 1-613-632-5200

P/N	D350-602-011	CHG	CHG005
DESC.	Heli-Utility-Pod	STC	SH93-97
LOT	B52426	STC	SR01144NY
MODEL	AS350	STC	

MADE IN CANADA D2729-1

BT 10-03-29

10-03-29

Dart Aerospace Ltd

W/O:		WORK ORDER CHANGES					
DATE	STEP	PROCEDURE CHANGE	By	Date	Qty	Approval Chief Eng / Prod Mgr	Approval QC Inspector

Part No: _____ **PAR #:** _____ **Fault Category:** _____ **NCR:** Yes No **DQA:** _____ **Date:** _____

Resolution: _____ **Disposition:** _____ **QA: N/C Closed:** _____ **Date:** _____

NCR:		WORK ORDER NON-CONFORMANCE (NCR)						
DATE	STEP	Description of NC Section A	Corrective Action Section B			Verification Section C	Approval Chief Eng	Approval QC Inspector
			Initial Chief Eng	Action Description Chief Eng	Sign & Date			

NOTE: Date & initial all entries

H:\fFORMS\Quality Assurance\approved QA\NCRWO RevE

Work Order ID 57243

Wednesday, March 31, 2010 8:26:30 AM

Item ID: D350-602-011 **Accept** **Setup Start** **Stop**

Revision ID:

Item Name: Heli-Utility-Pod (LH/RH)

Start Date: 3/31/2010 **Start Qty:** 1.00 **Cust Item ID:**

Required Date: 4/5/2010 **Req'd Qty:** 1.00 **Customer:**

Reference:

Run Start **Stop**

Approvals: **Process Plan:** _____ **Date:** _____ **Tooling:** _____ **Date:** _____

QC: _____ **Date:** _____ **SPC (Y/N):** _____ **Date:** _____

Sequence ID/ Work Center ID	Operation Description	Set Up/ Run Hours	Draw Number	Draw Rev.	Plan Code	Accept Qty	Reject Qty	Reject Number	Insp. Stamp
180		0.00							
Small Fab	**Memo**	0.00							
Small Fab	-SAND CURED REPAIR FLUSH TO EXISTING SURFACE						10 03 30		1
190	QC5- Inspect part completeness to step on W/O	0.00				1			1003.30
QC	**Memo**	0.00							
Quality Control									
200		0.00							
Small Fab	**Memo**	0.00					10-03-29		
Small Fab	RELOCATE HOLES FOR D2204-9 LATCH .500 INCH IN BOTH DIRECTIONS (1 INCH TOTAL)								P+O

Dart Aerospace Ltd

W/O: 57243

WORK ORDER CHANGES

DATE	STEP	PROCEDURE CHANGE	By	Date	Qty	Approval Chief Eng / Prod Mgr	Approval QC Inspector
10-04-01	200	trim Backer plates D2528-1 + D2528-3 as necessary to accomodate new hole locations and not interfere w/the radius	BT	10-04-01	1	10-04-01	10-04-01
100421	200	MS24665-353 B# H2524 Qty 2 needed for latch	[illegible]	100421	1	04-04-21	10-04-21

Part No: D350-602-011 PAR #: _____ Fault Category: _____ NCR: Yes No DQA: _____ Date: _____

Resolution: _____ Disposition: _____ QA: N/C Closed: _____ Date: _____

NCR:

WORK ORDER NON-CONFORMANCE (NCR)

DATE	STEP	Description of NC Section A	Corrective Action Section B: Initial Chief Eng	Action Description Chief Eng	Sign & Date	Verification Section C	Approval Chief Eng	Approval QC Inspector

NOTE: Date & initial all entries

H:\fFORMS\Quality Assurance\approved QA\NCRWO RevE

Work Order ID 57243

Wednesday, March 31, 2010 8:26:30 AM

Item ID: D350-602-011 **Accept** **Setup Start** **Stop**

Revision ID:

Item Name: Heli-Utility-Pod (LH/RH)

Start Date: 3/31/2010 **Start Qty:** 1.00 **Cust Item ID:**

Required Date: 4/5/2010 **Req'd Qty:** 1.00 **Customer:**

Reference:

Run Start **Stop**

Approvals: **Process Plan:** _____ **Date:** _____ **Tooling:** _____ **Date:** _____

QC: _____ **Date:** _____ **SPC (Y/N):** _____ **Date:** _____

Sequence ID/ Work Center ID	Operation Description	Set Up/ Run Hours	Draw Number	Draw Rev.	Plan Code	Accept Qty	Reject Qty	Reject Number	Insp. Stamp
210	QC5- Inspect part completeness to step on W/O	0.00							
QC Quality Control	**Memo**	0.00				1			10.03.30
220		0.00							
Small Fab	**Memo**	0.00							
Small Fab	SCUFF INTERIOR /EXTERIOR WITH 320 GRI PRIMER AND PAINT AS REQ"D								
230	QC5- Inspect part completeness to step on W/O	0.00							
QC Quality Control	**Memo**	0.00							

Primer M113582 → 10 03 30

Paint M113317 → 10.04.23

10.04.23

Work Order ID 57243

Wednesday, March 31, 2010 8:26:30 AM

Item ID: D350-602-011 **Accept** **Setup Start**

Revision ID: **Stop**

Item Name: Heli-Utility-Pod (LH/RH)

Start Date: 3/31/2010 **Start Qty:** 1.00 **Cust Item ID:**

Required Date: 4/5/2010 **Req'd Qty:** 1.00 **Customer:**

Reference:

Approvals: **Process Plan:** _____ **Date:** _____ **Tooling:** _____ **Date:** _____ **Run Start**

QC: _____ **Date:** _____ **SPC (Y/N):** _____ **Date:** _____ **Stop**

Sequence ID/ Work Center ID	Operation Description	Set Up/ Run Hours	Draw Number	Draw Rev.	Plan Code	Accept Qty	Reject Qty	Reject Number	Insp. Stamp
240	QC5- Inspect part completeness to step on W/O	0.00							
QC	**Memo**	0.00							
Quality Control									
260	Identify as per dwg & Stock Location: NEVR	0.00							
Packaging	**Memo**	0.00							
Packaging	ID AND STOCK UNDER NEW BATCH NUMBER CHG006								
	NEW LABELS ARE REQ"D CL 10/4/23 ~~[illegible]~~ label + Paperwork.								
270	QC21- Final Inspection - Work Order Release	0.00							
QC	**Memo**	0.00							
Quality Control									

10.04.23

10/04/26

10/04/28

10.04.28

DS19515-011 B 58062 per ECN 10-558 10/4/23

Picklist Print

Wednesday, March 31, 2010 8:26:30 AM

3

Work Order ID: 57243

Parent Item: D350-602-011

Parent Item Name: Heli-Utility-Pod (LH/RH)

Comments: IPP Rev:F Removed Travellers 06-04-06 JLM
IPP Rev:G Added D3495-1 06-05-17 JLM

Start Date: 3/31/2010 **Required Date:** 4/5/2010
Start Qty: 1.00 **Required Qty:** 1.00

Component Item ID/ Item Name	Replacement Item ID	Mfg/ Purch	Bin Item	Primary Location	Last Location	Route Seq ID	Unit of Measure	Qty on Hand	Remaining Qty To Pick	Qty Issued	Date Issued	Status
AD62ABS rivet		Purchased	No				Each	194.0000	38.0000			
				Warehouse Location		Loc Qty		Loc Code				
				Main Warehouse								
				ST281		194						
				110804		10						
				112896		184				38	100330	
AN4-5A Bolt		Purchased	No				Each	149.0000	8.0000			
				Warehouse Location		Loc Qty		Loc Code				
				Main Warehouse								
				ST356		149						
				100089		6						
				109061		9						
				110844		7						
				112933		27				8	100330	
				114108		100						
AN960JD416 Washer		Purchased	No				Each	8.0000	8.0000			
NAS 1149D0 463J QSI 17				Warehouse Location		Loc Qty		Loc Code				
				Main Warehouse								
				ST357		8						
				111279		8		8			100330	
				M113706								

Dart Aerospace Ltd

W/O:		WORK ORDER CHANGES					
DATE	STEP	PROCEDURE CHANGE	By	Date	Qty	Approval Chief Eng / Prod Mgr	Approval QC Inspector

Part No: _____ **PAR #:** _____ **Fault Category:** _____ **NCR:** Yes No **DQA:** _____ **Date:** _____

Resolution: _____ **Disposition:** _____ **QA: N/C Closed:** _____ **Date:** _____

NCR:		WORK ORDER NON-CONFORMANCE (NCR)						
DATE	STEP	Description of NC Section A	Corrective Action Section B			Verification Section C	Approval Chief Eng	Approval QC Inspector
			Initial Chief Eng	Action Description Chief Eng	Sign & Date			

NOTE: Date & initial all entries

H:\fFORMS\Quality Assurance\approved QA\NCRWO RevE

Picklist Print

Wednesday, March 31, 2010 8:26:30 AM

Work Order ID: 57243

Parent Item: D350-602-011

Parent Item Name: Heli-Utility-Pod (LH/RH)

Comments: IPP Rev:F Removed Travellers 06-04-06 JLM
IPP Rev:G Added D3495-1 06-05-17 JLM

Start Date: 3/31/2010 **Required Date:** 4/5/2010

Start Qty: 1.00 **Required Qty:** 1.00

Component Item ID/ Item Name	Replacement Item ID	Mfg/ Purch	Bin Item	Primary Location	Last Location	Route Seq ID	Unit of Measure	Qty on Hand	Remaining Qty To Pick	Qty Issued	Date Issued	Status
D2204-9 Latch, Rubber		Manufactured	No				Each	18.0000	2.0000			
				Warehouse Location		**Loc Qty**		**Loc Code**				
				Main Warehouse								
				ST204		18						
				39689		18				2	100330	
D2462-1700 Seal		Manufactured	No				Each	0.0000	1.0000			
						B48530					~~100332~~	
D2528-1 Backer Plate		Manufactured	No				Each	24.0000	2.0000			P+O
				Warehouse Location		**Loc Qty**		**Loc Code**				
				Main Warehouse								
				ST017		24						
				52655		24				2	100330	
D2528-3 Backer Plate		Manufactured	No				Each	19.0000	2.0000			
				Warehouse Location		**Loc Qty**		**Loc Code**				
				Main Warehouse								
				ST017		19						
				52656		19				2	100830	

Dart Aerospace Ltd

W/O:		WORK ORDER CHANGES						
DATE	STEP		PROCEDURE CHANGE	By	Date	Qty	Approval Chief Eng / Prod Mgr	Approval QC Inspector
10-04-01		replaced seal Better fit.	D2462 w/ D seal D2461 B 55054	BT	10-04-01	1	[illegible]	[illegible] 10-04-01

Part No: _____ PAR #: _____ Fault Category: _____ NCR: Yes No DQA: _____ Date: _____

Resolution: _____ Disposition: _____ QA: N/C Closed: _____ Date: _____

NCR:		WORK ORDER NON-CONFORMANCE (NCR)						
DATE	STEP	Description of NC Section A	Corrective Action Section B			Verification Section C	Approval Chief Eng	Approval QC Inspector
			Initial Chief Eng	Action Description Chief Eng	Sign & Date			

NOTE: Date & initial all entries

H:\fFORMS\Quality Assurance\approved QA\NCRWO RevE

Picklist Print

Wednesday, March 31, 2010 8:26:30 AM

Work Order ID: 57243

Parent Item: D350-602-011

Parent Item Name: Heli-Utility-Pod (LH/RH)

Comments: IPP Rev:F Removed Travellers 06-04-06 JLM
IPP Rev:G Added D3495-1 06-05-17 JLM

Start Date: 3/31/2010 **Required Date:** 4/5/2010

Start Qty: 1.00 **Required Qty:** 1.00

Component Item ID/ Item Name	Replacement Item ID	Mfg/ Purch	Bin Item	Primary Location	Last Location	Route Seq ID	Unit of Measure	Qty on Hand	Remaining Qty To Pick	Qty Issued	Date Issued	Status
MS21042L4 Nut		Purchased	No				Each	2,038.000	8.0000			

Warehouse Location	Loc Qty	Loc Code		
Main Warehouse				
ST139	12			
111827	12			
Main Warehouse				
ST300	2026			
102552	6			
104248	6			
110507	184			
113422	822		8	100330
114108	1000			
9063	8			

Dart Aerospace Ltd

W/O:		WORK ORDER CHANGES					
DATE	STEP	PROCEDURE CHANGE	By	Date	Qty	Approval Chief Eng / Prod Mgr	Approval QC Inspector

Part No: _____ **PAR #:** _____ **Fault Category:** _____ **NCR:** Yes No **DQA:** _____ **Date:** _____

Resolution: _____ **Disposition:** _____ **QA: N/C Closed:** _____ **Date:** _____

NCR:		WORK ORDER NON-CONFORMANCE (NCR)						
DATE	STEP	Description of NC Section A	Corrective Action Section B			Verification Section C	Approval Chief Eng	Approval QC Inspector
			Initial Chief Eng	Action Description Chief Eng	Sign & Date			

NOTE: Date & initial all entries

H:\fFORMS\Quality Assurance\approved QA\NCRWO RevE

DESIGN	DRAWN BY	DART AEROSPACE LTD HAWKESBURY, ONTARIO, CANADA
CHECKED	APPROVED	DRAWING NO. D2694 — REV. H — SHEET 1 OF 4
DATE 07.07.18		TITLE UTILITY POD ASSEMBLY — SCALE NTS

RELEASED 07.07.23

A	97.07.02	NEW ISSUE CREATED TO REPLACE D350-602-041 AND -043
B	97.10.08	CHANGE RIVET PATTERN, ADD D2429
C	98.11.12	ADD DOUBLER HOLES, REMOVE FINISH
D	99.01.08	SEAL & HINGE CHANGE (TSR A1047 & A855/A858); INCLUDED DE09119
E	99.12.20	CHANGE DIMENSIONS
F	01.03.20	REDESIGN, CHANGE LATCHES & PROP
G	01.05.08	REVERT BACK TO D2204-9 LATCH
H	07.07.18	CHANGED RIVETS FROM AD64ABS TO AD62ABS (PAR#185)

Qty	Part Number	Description
1	D2202-1	POD LID
1	D2202-3	POD BASE
5	D2204-9	LATCH
1	D2429-041	SPRING CLIP ASSEMBLY
1	D2462-1700	NEOPRENE SEAL
5	D2528-1	BACKER PLATE
4	D2528-3	BACKER PLATE
1	D2569	HINGE
1	D3007-041	PROP ASSEMBLY
19	AN4-5A	BOLT
1	AN4-6A	BOLT
2	AN526C632R7	SCREW
21	AN960JD416	WASHER
2	AN960JD6	WASHER
2	MS21042L06	NUT (OR MS21042-06)
20	MS21042L4	NUT (OR MS21042-4)
38	AD62ABS	RIVET

H

GENERAL NOTES:

1) TRANSFER DRILL UNSPECIFIED HOLES FROM ATTACHING PART AS FOLLOWS: AN526C632 → DRILL Ø0.141
   AN4 → DRILL Ø0.257
2) SEAL ALL HOLES AND EDGES OF POD WITH CYANOACRYLATE GLUE
3) FOR D2569 HINGE:
   (i) INSTALL RIVET HEADS FROM OUTSIDE OF POD
   (ii) GRIND TRAILING EDGE OF RIVET TO PERMIT HINGE TO CLOSE
   (iii) ENSURE ALL RIVET HOLES ARE DRILLED ON THE LARGER HINGE TABS AS SHOWN IN DETAIL A
4) TOLERANCES ARE PER DART QSI 018 UNLESS OTHERWISE NOTED
5) ALL DIMENSIONS ARE IN INCHES UNLESS OTHERWISE NOTED

Copyright © 1997 by DART AEROSPACE LTD
THIS DOCUMENT IS PRIVATE AND CONFIDENTIAL AND IS SUPPLIED ON THE EXPRESS CONDITION THAT IT IS NOT TO BE USED FOR ANY PURPOSE OR COPIED OR COMMUNICATED TO ANY OTHER PERSON WITHOUT WRITTEN PERMISSION FROM DART AEROSPACE LTD.

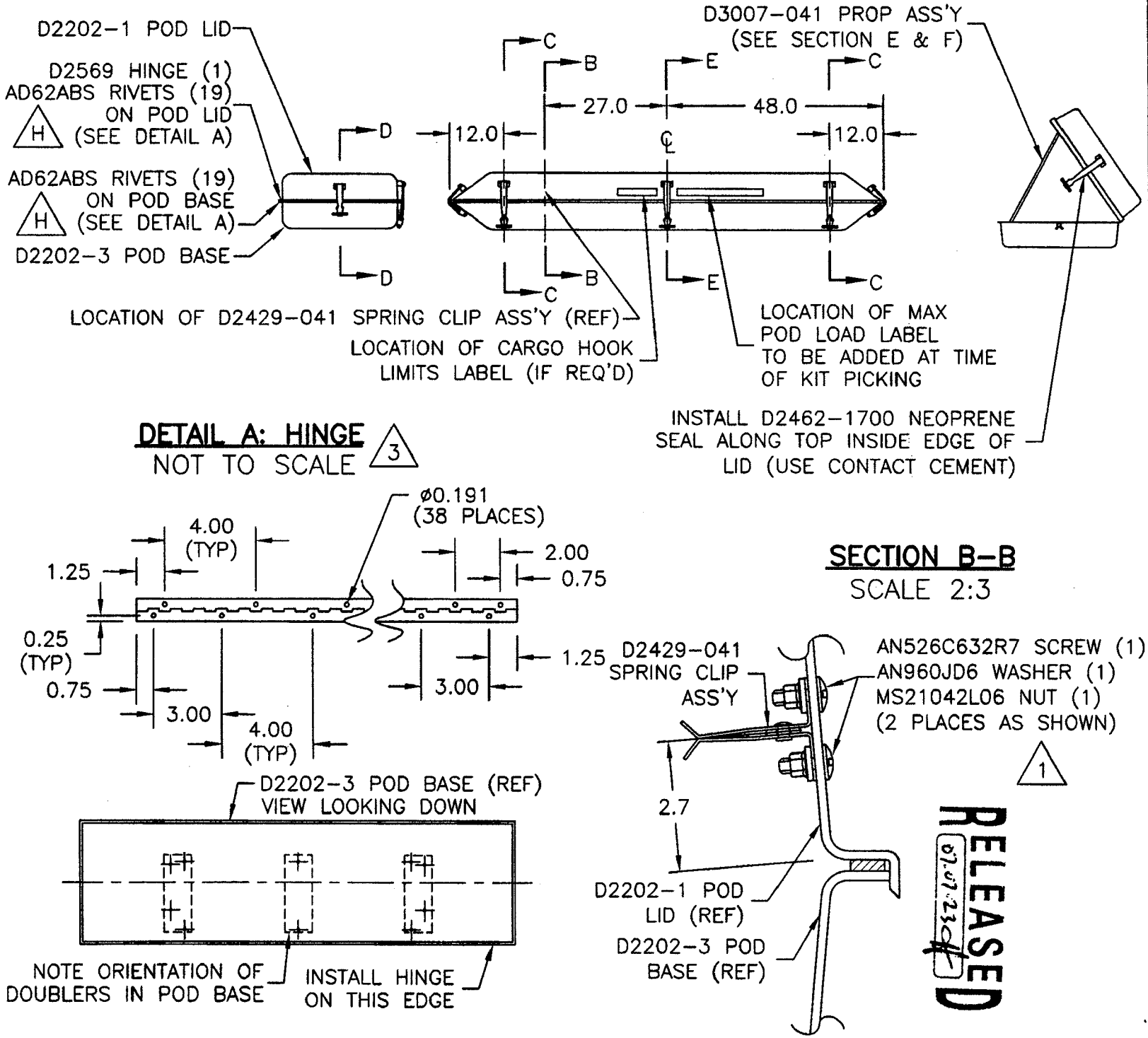

DART

DESIGN	DRAWN BY	DART AEROSPACE LTD HAWKESBURY, ONTARIO, CANADA	
CHECKED	APPROVED	DRAWING NO. D2694	REV. H
DATE 07.07.18		TITLE UTILITY POD ASSEMBLY	SHEET 2 OF 4 SCALE 1:30

Copyright © 1997 by DART AEROSPACE LTD
THIS DOCUMENT IS PRIVATE AND CONFIDENTIAL AND IS SUPPLIED ON THE EXPRESS CONDITION THAT IT IS NOT TO BE USED FOR ANY PURPOSE OR COPIED OR COMMUNICATED TO ANY OTHER PERSON WITHOUT WRITTEN PERMISSION FROM DART AEROSPACE LTD.

DESIGN	DRAWN BY	DART AEROSPACE LTD HAWKESBURY, ONTARIO, CANADA	
CHECKED	APPROVED	DRAWING NO. D2694	REV. H SHEET 3 OF 4
DATE 07.07.18		TITLE UTILITY POD ASSEMBLY	SCALE 1:2

RELEASED 07.07.23

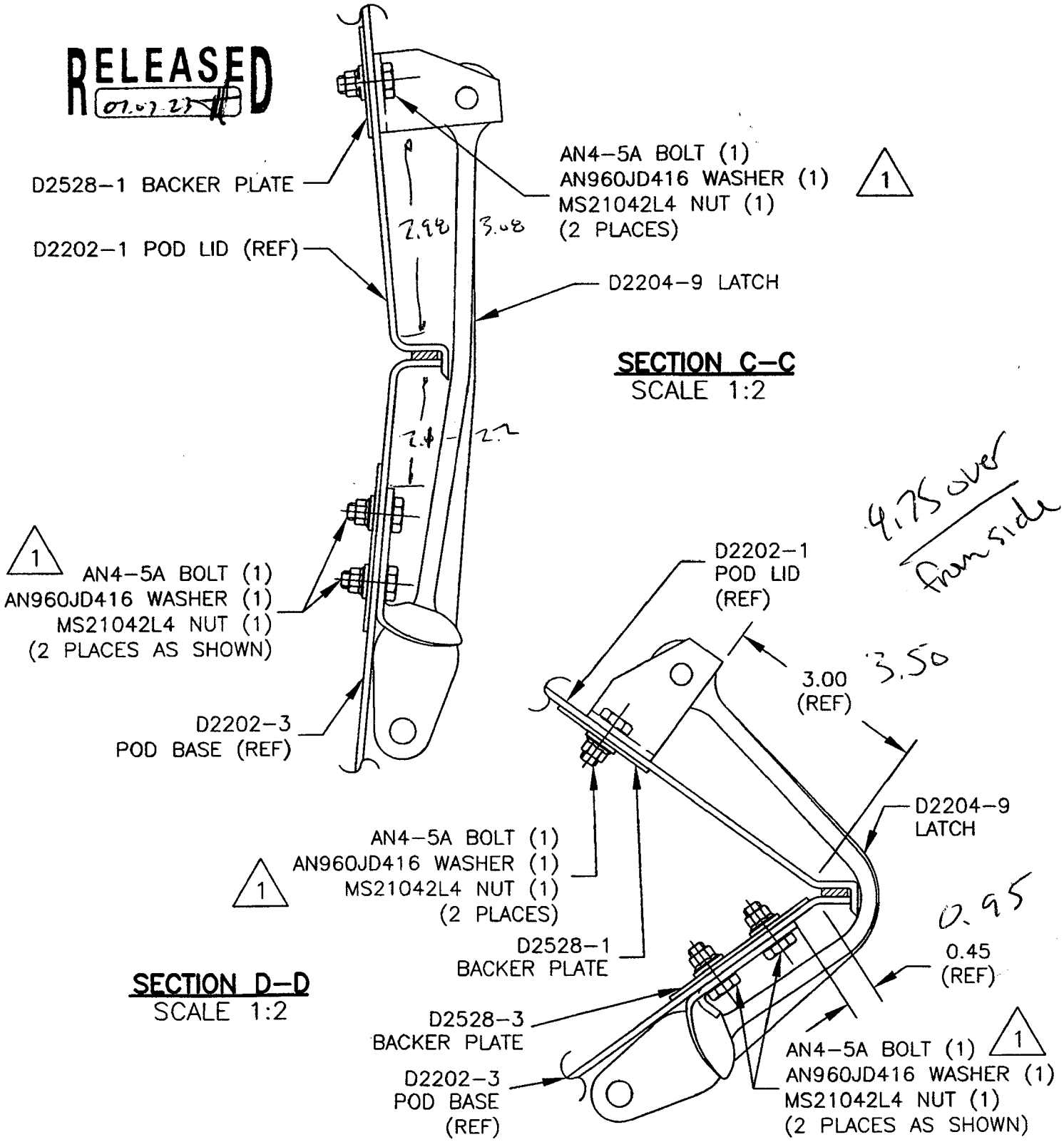

Copyright © 1997 by DART AEROSPACE LTD

THIS DOCUMENT IS PRIVATE AND CONFIDENTIAL AND IS SUPPLIED ON THE EXPRESS CONDITION THAT IT IS NOT TO BE USED FOR ANY PURPOSE OR COPIED OR COMMUNICATED TO ANY OTHER PERSON WITHOUT WRITTEN PERMISSION FROM DART AEROSPACE LTD.

DESIGN	DRAWN BY	DART AEROSPACE LTD HAWKESBURY, ONTARIO, CANADA	
CHECKED	APPROVED	DRAWING NO. D2694	REV. H SHEET 4 OF 4
DATE 07.07.18		TITLE UTILITY POD ASSEMBLY	SCALE 1:2

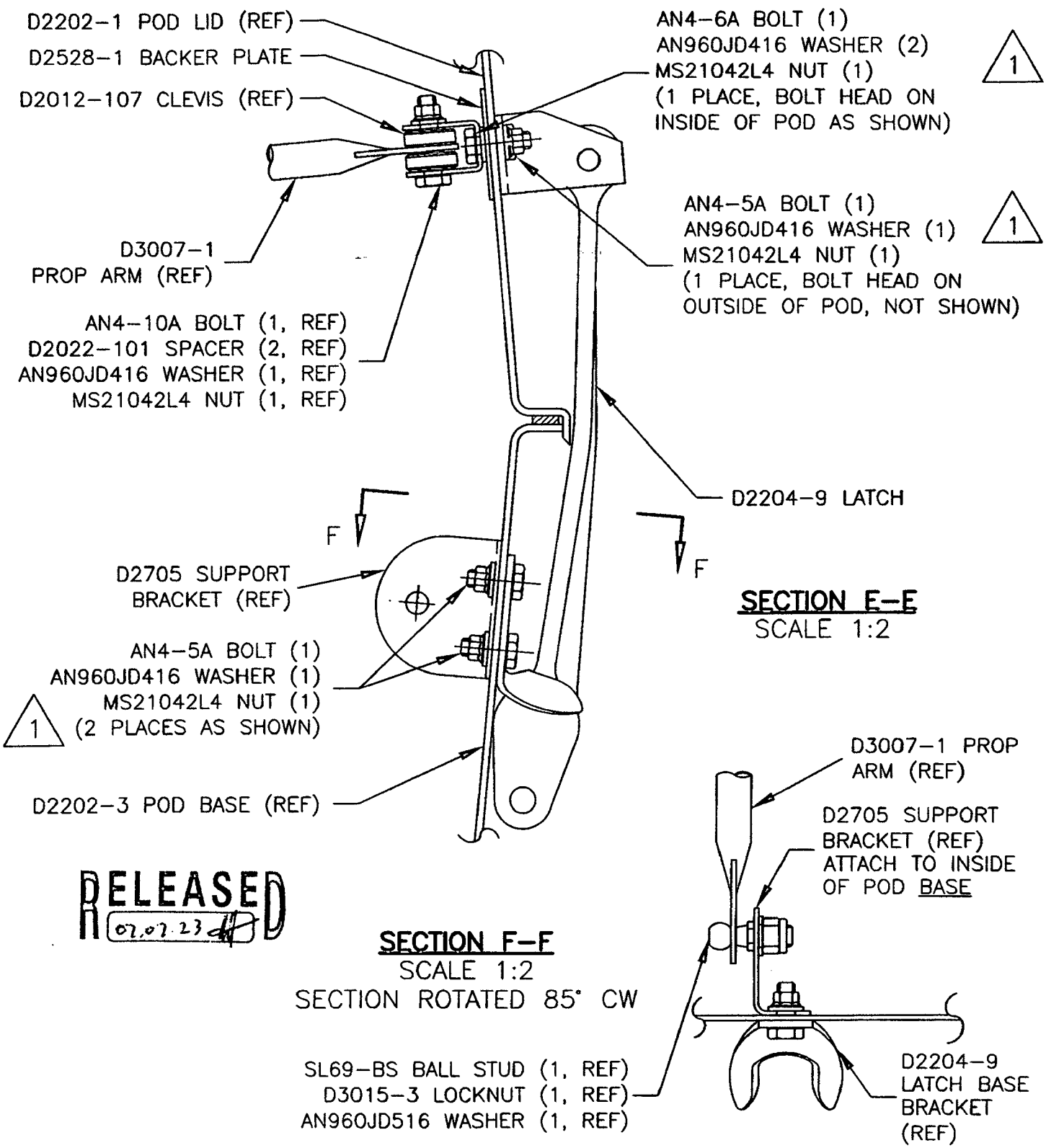

Copyright © 1997 by DART AEROSPACE LTD

THIS DOCUMENT IS PRIVATE AND CONFIDENTIAL AND IS SUPPLIED ON THE EXPRESS CONDITION THAT IT IS NOT TO BE USED FOR ANY PURPOSE OR COPIED OR COMMUNICATED TO ANY OTHER PERSON WITHOUT WRITTEN PERMISSION FROM DART AEROSPACE LTD.